Cloud
Clearly better sound

How to wire a PM4 or PM4SA to a 24-120/ 24-240

(Non-Shielded Cat 5/6 cable)

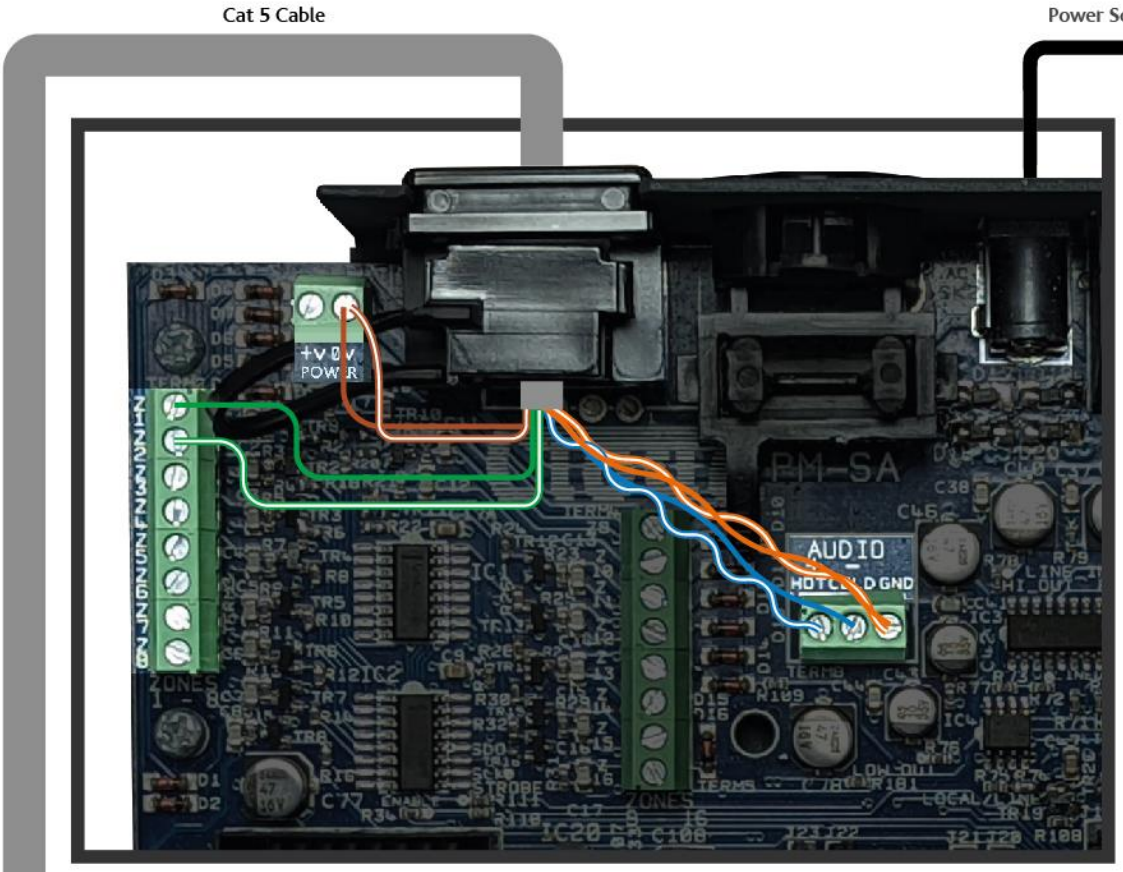

An optional PSU to power the paging mic will be required:
Cloud Part No.
PS-UK (UK Ver.)
PS-EU (Euro Ver.)
PS-NA (USA Ver.)

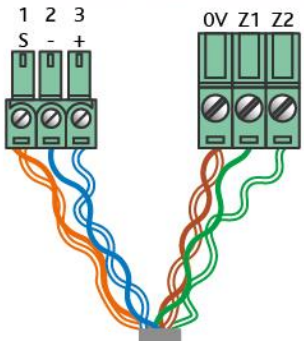

Though traditionally it is best practise to wire individual audio and access switching connections to the 24-120/240 it is possible to use CAT-5/6 cable.

As the 24 Series use 2 zones; you can utilise enough cores for all connections using 1 cable. This diagram is an example how to wire this using just 1 Cat-5/6 (non-shielded). There is an alternate Tech Note for Shielded Cat-5/6 cable **(TN-031)**

Cat 5 Cable

MADE IN BRITAIN

Cloud Electronics Limited
140 Staniforth Road, Sheffield, S9 3HF. England. Telephone: +44 (0)114 244 7051 Web: www.cloud.co.uk Email: info@cloud.co.uk