ARTECTA
THE ART OF LIGHTING

LED technology

A0139517 Vigo Spot 12 WW AR111

Technical specifications:

LED system:	12x 1W LED warm-white (8xWW & 4xCW)
Beam angle:	30°
Power consumption:	max. 12.9 W
Housing:	Extruded Aluminium
Ambient Temperature:	-20°C / +40°C
Cooling system:	Convection
Controll system:	Vigo Drive (DMX-512 & Stand-alone)

Included 1.5m data cable 24AWGx4P; cat5e
included mounted RJ-45 connector
Included RJ-45 splitterblock

KG	Operat. Power	Class		LED-Power	30° Symm. LED-Lens	IES-File	Ø110.5 mm H 58 mm
0.63	350mA	Class III	IP-20	12x 1W		available	Dimensions

advised downlight:
A0130950 Almeria-R
A0130951 Almeria-SQ
(not included)

Advised DMX-512 controllers (excluded)

A9915003 Vigo Drive-1
Voltage: AC100-240V, 50/60Hz max. 40W
Output: 1 Fixture Line (1x RJ-45 connector)
Output line: max. 3x Vigo Spot 12 WW
DMX Channels 4 modes selectable: 3ch. , 4ch. , 6ch. or 8ch.
Operation: DMX, Master/Slave, Stand-alone
Functions: Auto programs with step & fade time and Custom programs, Static Play, Calibration, RGB, Clock, 10 Built-in Programs, 10 Custom Programs.
DMX Connection: RJ45 or RS-232,
Display: LCD
Ambient Temperature: -20°C/+40°C
IP20
Dimensions: 250 x 100 x 50 mm
Weight: 1 kg

A9915002 Vigo Drive-4
Voltage: AC100-240V, 50/60Hz max. 158W
Output: 4 Fixture Lines (4x RJ-45 connector)
Output per line: max. 3x Vigo Spot 12 WW
Total Output: max. 12x Vigo Spot 12 WW
DMX Channels 3 modes selectable: 3ch. , 4ch. , 6ch. or 8ch.
Operation: DMX, Master/Slave, Stand-alone
Functions: Auto Programs, Custom Programs, Static Play, Calibration, RGB mode, White mode.
Built-in Programs: 40, Custom Programs: 5
DMX Connection: RJ45 or RS-232,
Display: LCD
Ambient Temperature: -20°C/+40°C
IP20
Dimensions: 323 x 225 x 68 mm
Weight: 2.8 kg

A9915000 Vigo Drive-16
Voltage: AC100-240V, 50/60Hz max. 650W
Output: 16 Fixture Lines (16x RJ-45 connector)
Output per line: max. 3x Vigo Spot 12 WW
Total Output: max. 48x Vigo Spot 12 WW
DMX Channels 4 modes selectable: 3ch. , 4ch. , 6ch. or 8ch.
Operation: DMX, Master/Slave, Stand-alone
Functions: Auto Programs, Custom Programs, Static Play, Calibration, RGB work mode, White work mode.
Built-in Programs: 40, Custom Programs: 5
DMX Connection: RJ45 or RS-232, Display: LCD
Ambient Temperature: -20°C/+40°C (IP20)
Dimensions: 532 x 145 x 19 mm
Weight: ? kg

Dimensions in mm

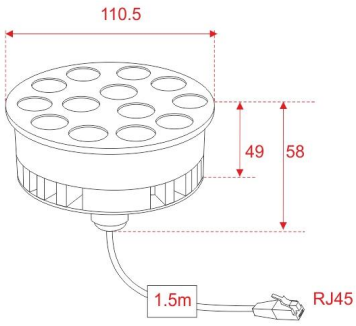

RJ45

pin-1: white/orange:	Red LED +
pin-2: orange:	Green LED+
pin-3: white/green:	Blue LED+
pin-4: blue:	Not used
pin-5: white/blue:	Red LED-
pin-6: green:	Green LED-
pin-7: white brown	Blue LED-
pin-8: brown	not used

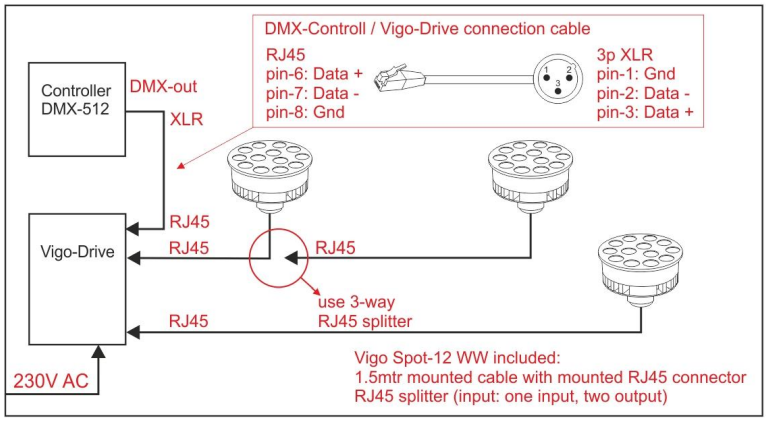

Architainment